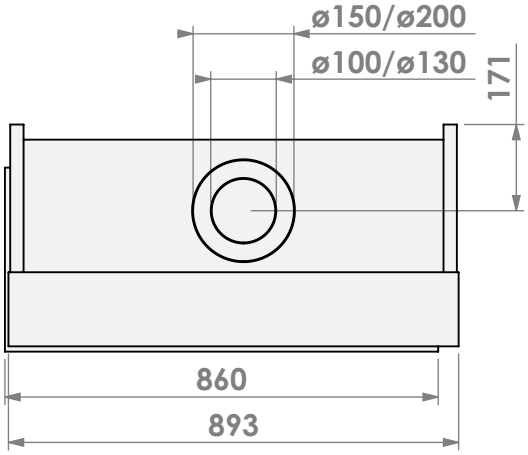


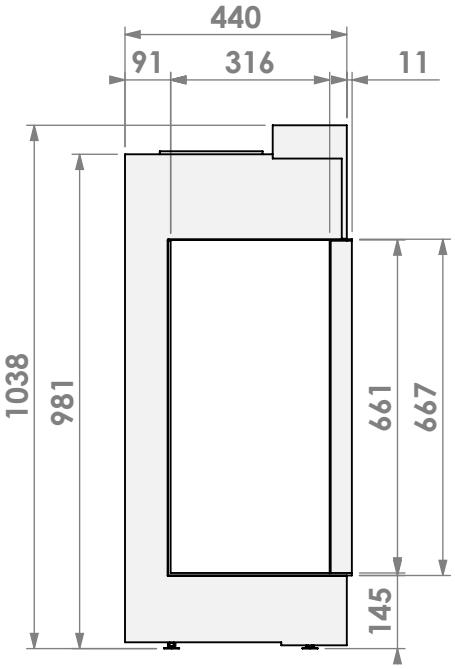


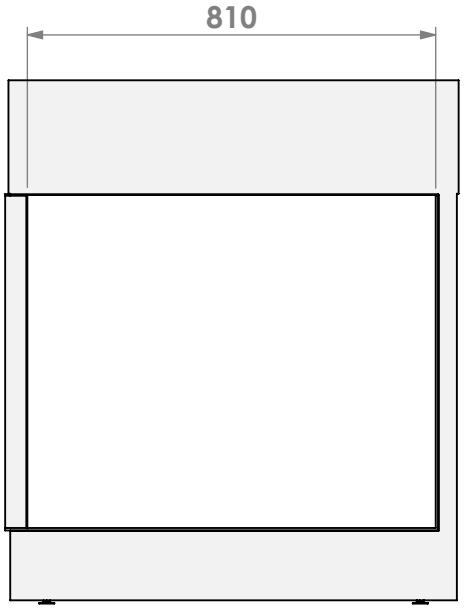


Barbas Bellfires B.V.
Hallenstraat 17
5531 AB Bladel
The Netherlands
www.barbasbellfires.com

Name:
Corner Bell Derby 3 L hidden door

Modifications reserved

Projection: American

Scale: 1:15

Unit: mm

Version: 0

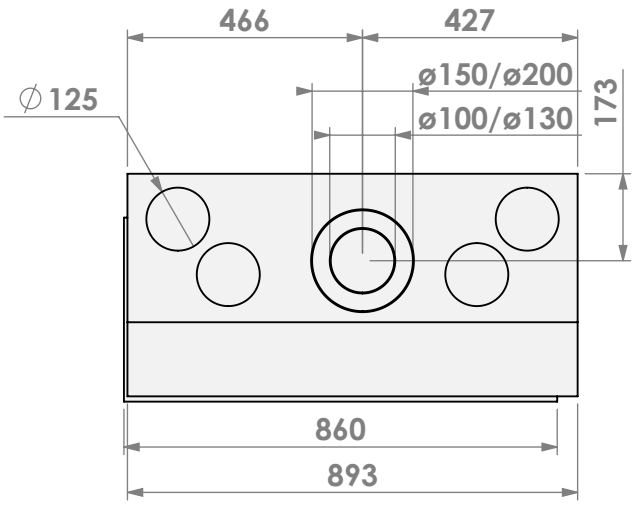


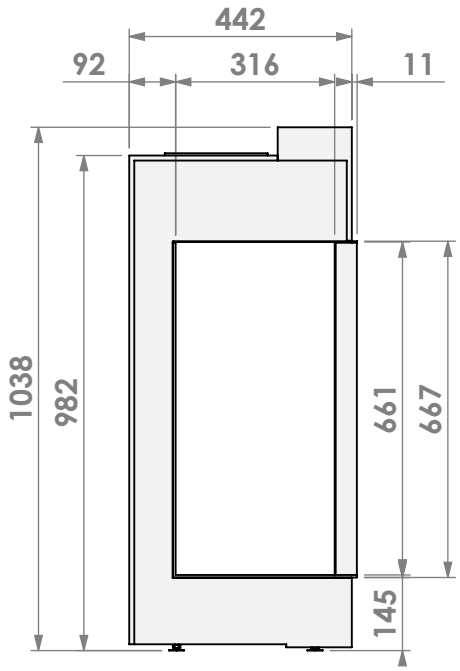


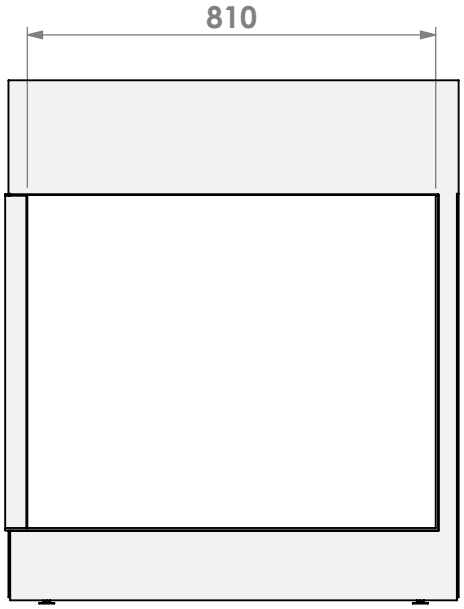


bellfires.
Barbas Bellfires B.V.
Hallenstraat 17
5531 AB Bladel
The Netherlands
www.barbasbellfires.com

Name:
Corner Bell Derby 3 L hidden door convection casing

Modifications reserved

Projection: American

Scale: 1:15

Unit: mm

Version: 0

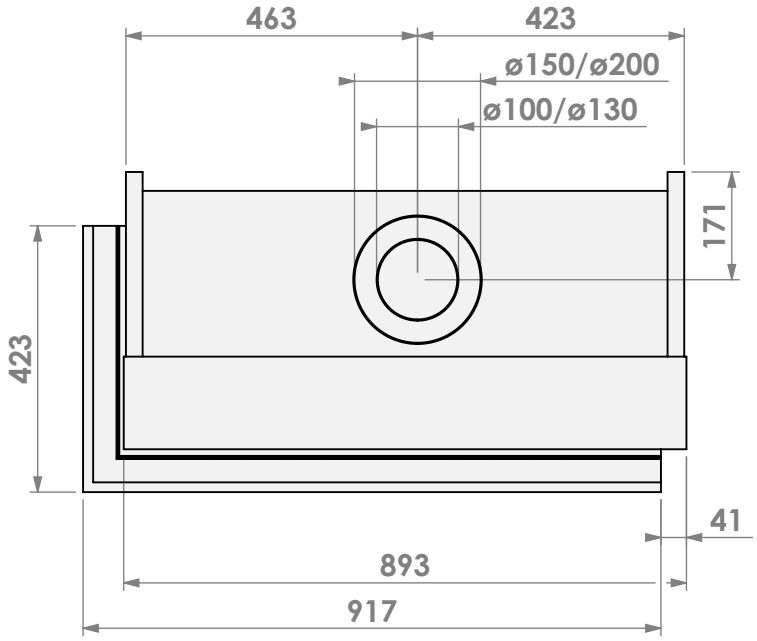


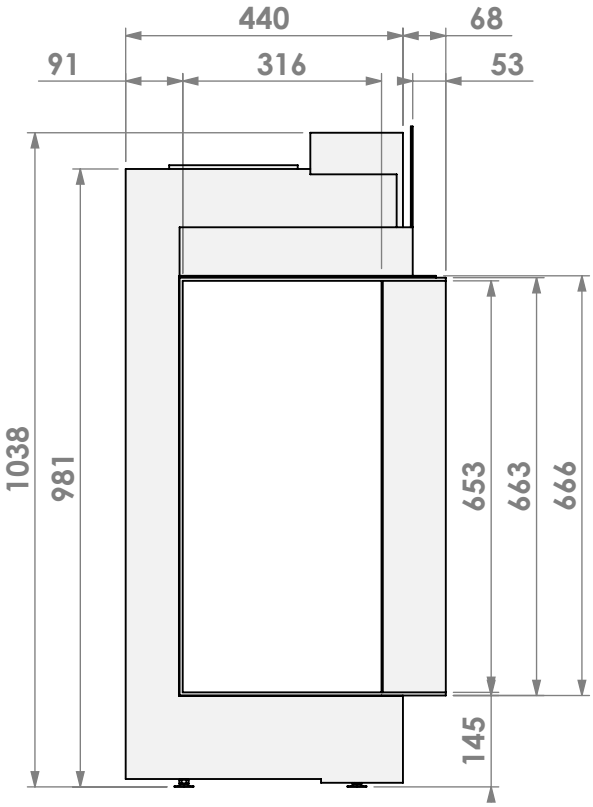


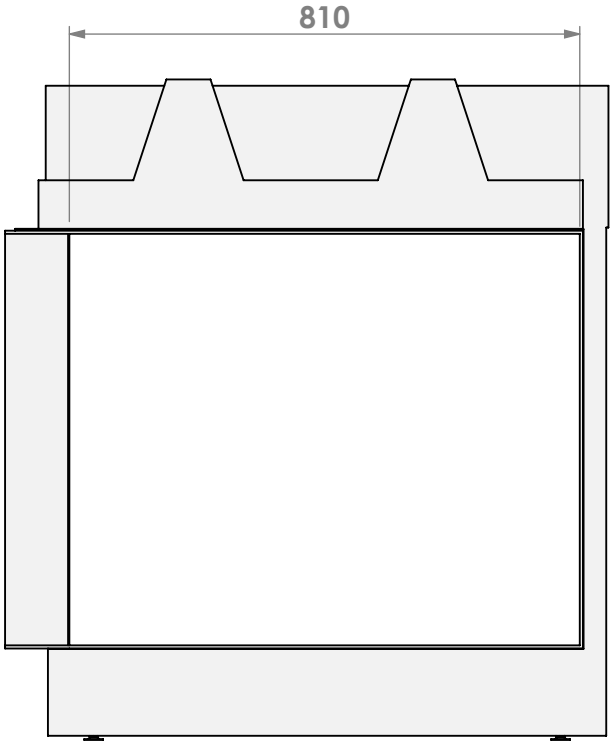


bellfires.
Barbas Bellfires B.V.
Hallenstraat 17
5531 AB Bladel
The Netherlands
www.barbasbellfires.com

Name: Corner Bell Derby 3 L hidden door+ 10 cm

Modifications reserved

Projection: American

Scale: 1:15

Unit: mm

Version: 0